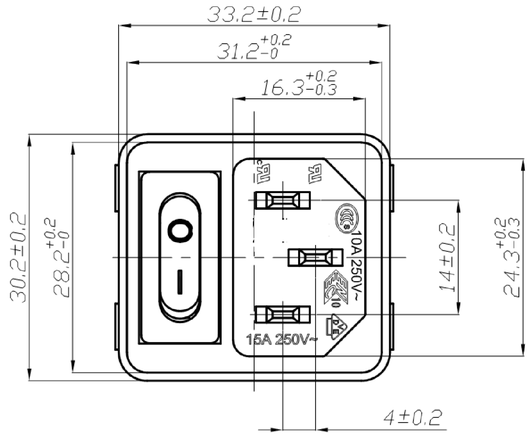

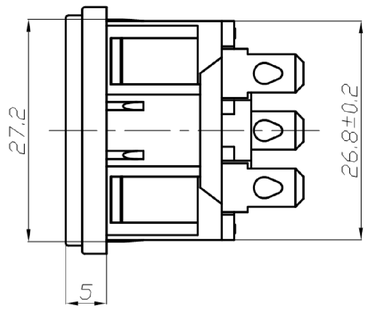

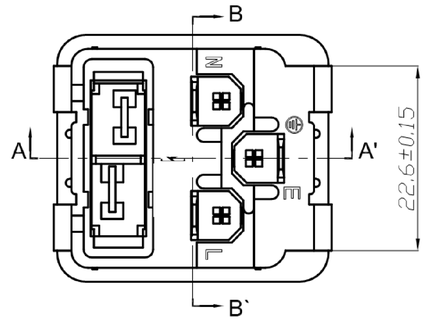

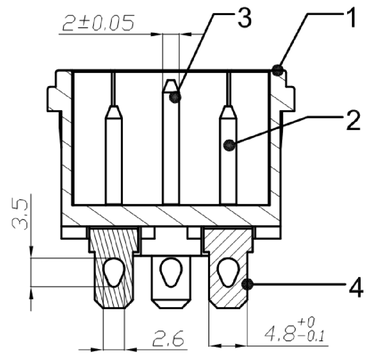

SECTION B~B

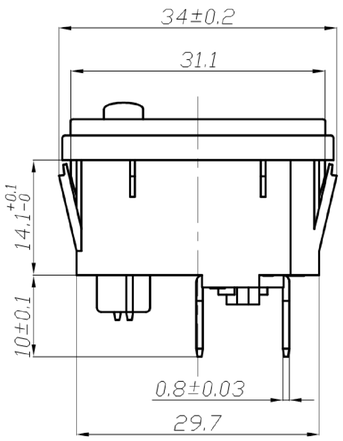

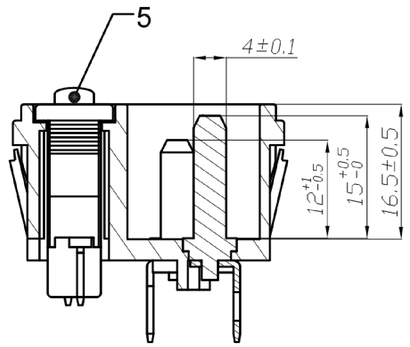

SECTION A~A

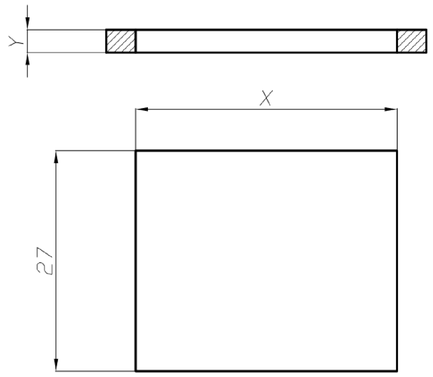

PANEL CUT-OUT

规格 SPECIFICATION

1.额定值 RATING: 10A 250VAC

2.绝缘电阻 INSULATION RESISTANCE: ≥100MΩ(DC500V/1MIN)

3.介电强度 DIELECTRIC STRENGTH: 2000V /0.5mA /1MIN

4.工作温度OPERATING TEMPERATURE: -25°C TO +85°C(MAX)

5.端子浸焊条件 DIP SOLDERING: 265°C, 3S

ITEM NO.	DESCRIPTION	DRAWN	DATE

東莞市高迪電子有限公司
DONG GUAN GAO DI ELECTRONICS CO. , LTD

TOLERANCE UNLESS OTHERWISE STATED : Up to 5 ±0.2; Above 5 ~ 15 ±0.3; Above 15 ~ 30 ±0.4; Above 30 ~ 50 ±0.5; Angle ±0.3°

3RD. ANGEL'S | UNITS MM

DRAWN BY: Ming Ming Zou	DATE 10/31/13	MAT'L	
CHECKED BY: Ning Ning Su	DATE 10/31/13	FINISH	
APPROVED BY: Jia Xiang	DATE 10/31/13	SCALE	1 : 1
		SHEET NO.	1 of 1

TITLE	SWITCH+JACK
MODLE	AC POWER SOCKET
DWG NO.	GD-JR-101-1FSA2
PART NO.	
SIZE	A4
VER	R